Taper keys with gip head DIN 6887

mbo standard 30

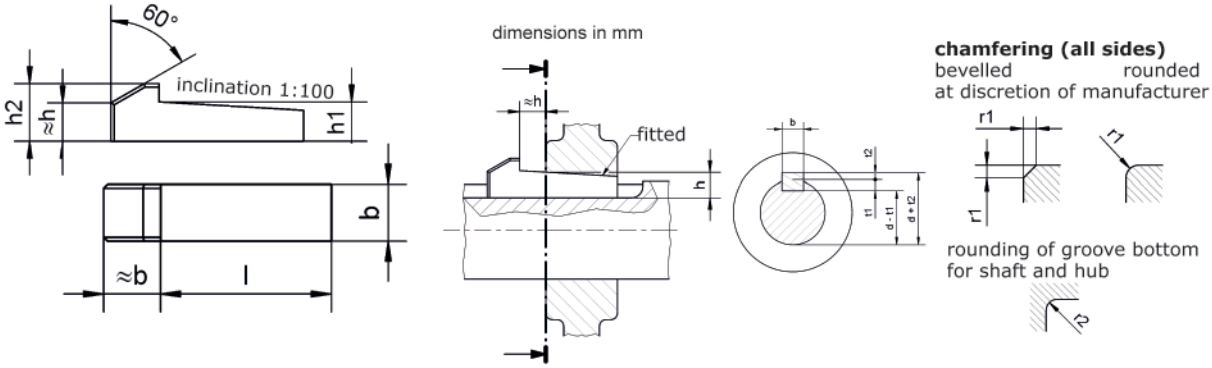

Example for ordering: Taper key according to DIN 6887, b = 10 mm, h = 8 mm, l = 50 mm, bright;
Order number: 10 30 1008 0500/001

Order number[4]	Key width b h9	Key height h	For shaft diameter d[1] above	For shaft diameter d[1] up to	Key height h1	Key height perm. diff.	Gip height h2	Groove width b D10	Shaft groove depth t1[2]	Shaft groove depth perm. diff.	Hub groove depth t2[2]	Hub groove depth perm. diff.	Bevelled/ rounded r1 min.	Bevelled/ rounded r1 max.	Rounding of groove bottom r2 max.	Rounding of groove bottom r2 min.	Length mm l[3] from	Length mm l[3] up to	Length mm l[3] perm. diff.
10 30 0404 ..../001	4	4	10	12	4.1	-0.1	7	4	2.5	+0.1	1.2	+0.1	0.16	0.25	0.16	0.08	14	45	-0.2 -0.3
10 30 0505 ..../001	5	5	12	17	5.1		8	5	3		1.7		0.25	0.4	0.25	0.16	14	56	
10 30 0606 ..../001	6	6	17	22	6.1		10	6	3.5		2.2		0.25	0.4	0.25	0.16	16	70	
10 30 0807 ..../001	8	7	22	30	7.2	-0.2	11	8	4	+0.2	2.4	+0.2	0.25	0.4	0.25	0.16	20	90	-0.2
10 30 1008 ..../001	10	8	30	38	8.2		12	10	5		2.4		0.4	0.6	0.4	0.25	25	110	-0.5
10 30 1208 ..../001	12	8	38	44	8.2		12	12	5		2.4		0.4	0.6	0.4	0.25	32	140	-0.3 -0.5
10 30 1409 ..../001	14	9	44	50	9.2		14	14	5.5		2.9		0.4	0.6	0.4	0.25	40	160	
10 30 1610 ..../001	16	10	50	58	10.2		16	16	6		3.4		0.4	0.6	0.4	0.25	45	180	
10 30 1811 ..../001	18	11	58	65	11.2		18	18	7		3.4		0.4	0.6	0.4	0.25	50	200	
10 30 2012 ..../001	20	12	65	75	12.2		20	20	7.5		3.9		0.6	0.8	0.6	0.4	56	220	
10 30 2214 ..../001	22	14	75	85	14.2		22	22	9		4.4		0.6	0.8	0.6	0.4	63	250	
10 30 2514 ..../001	25	14	85	95	14.2		22	25	9		4.4		0.6	0.8	0.6	0.4	70	280	
10 30 2816 ..../001	28	16	95	110	16.2		25	28	10		5.4		0.6	0.8	0.6	0.4	80	320	
10 30 3218 ..../001	32	18	110	130	18.3		28	32	11		6.4		0.6	0.8	0.6	0.4	90	360	-0.5
10 30 3620 ..../001	36	20	130	150	20.4	-0.3	32	36	12	+0.3	7.1	+0.3	1	1.2	1	0.7	100	400	
10 30 4022 ..../001	40	22	150	170	22.4		36	40	13		8.1		1	1.2	1	0.7	110	400	
10 30 4525 ..../001	45	25	170	200	25.4		40	45	15		9.1		1	1.2	1	0.7	125	400	
10 30 5028 ..../001	50	28	200	230	28.4		45	50	17		10.1		1	1.2	1	0.7	140	400	
10 30 5632 ..../001	56	32	230	260	32.5		50	56	20		11.1		1.6	2	1.6	1.2			
10 30 6332 ..../001	63	32	260	290	32.5		50	63	20		11.1		1.6	2	1.6	1.2			
10 30 7036 ..../001	70	36	290	330	36.5		56	70	22		13.1		1.6	2	1.6	1.2			
10 30 8040 ..../001	80	40	330	380	40.5		63	80	25		14.1		2.5	3	2.5	2			
10 30 9045 ..../001	90	45	380	440	45.6		70	90	28		16.1		2.5	3	2.5	2			
10 30 0050 ..../001	100	50	440	500	50.6		80	100	31		18.1		2.5	3	2.5	2			

1) For connection dimensions, in particular of shaft ends, the allocation of the key cross-section to the shaft diameters must be maintained without fail.
2) Please comply with the requirements of DIN 6887.
3) Intermediate lengths outside DIN 6887 must be selected according to DIN 3. Please comply with the requirements of DIN 6887.
4) The last 4 digits before the / (....) are intended to denote length l. Please clearly indicate l.

Material:
St 60 - 1, bright

Special versions upon request

Special steels/stainless steel on request

20_01
12/2012

mbo Osswald GmbH & Co KG
Metal processing · Linking technology

www.mbo-osswald.com · info@mbo-osswald.de
Tel: + 49 (0) 9345-670-0 · Fax: + 49 (0) 9345-6255

General tolerances
DIN ISO 2768-medium

Subject to technical alterations

We accept no responsibility for incorrect or incomplete details or information given

Tangential keys DIN 268

for alternating shock loads

mbo standard 31

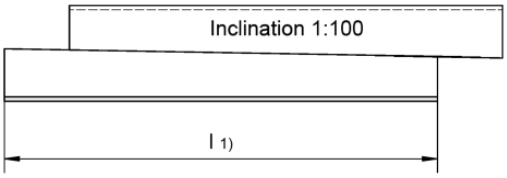

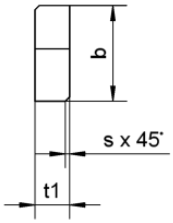

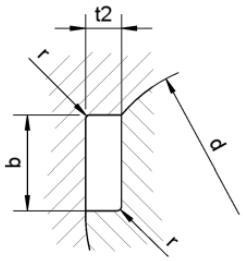

1) The length l depends on the design and must be quoted. It is recommended that a length of about 10 to 15% more than the hub length be selected.

Example for ordering: Tangential key according to DIN 268, b = 60 mm, t1 = 20 mm, l = 120 mm, bright;
Order number: 10 31 0600 1200/001

Order number[2)] - in pairs -	b Calculated	Key t1 h11	Key s min.	Key s max.	Groove t2	Groove t2 perm. diff.	Groove r max.	Groove r min.	For shaft diameter d
10 31 0300 ..../001	30	10	1	1.2	10.3	+0.2 0	1	0.7	100
10 31 0330 ..../001	33	11			11.4				110
10 31 0360 ..../001	36	12			12.4	+0.3 0			120
10 31 0375 ..../001	37.5	12.5			12.9				125
10 31 0390 ..../001	39	13			13.4				130
10 31 0420 ..../001	42	14			14.4				140
10 31 0450 ..../001	45	15			15.4				150
10 31 0480 ..../001	48	16			16.4				160
10 31 0510 ..../001	51	17	1.6	2	17.4		1.6	1.2	170
10 31 0540 ..../001	54	18			18.4				180
10 31 0570 ..../001	57	19			19.4				190
10 31 0600 ..../001	60	20			20.4				200
10 31 0660 ..../001	66	22			22.4				220
10 31 0720 ..../001	72	24	2.5	3	24.4		2.5	2	240
10 31 0750 ..../001	75	25			25.4				250
10 31 0780 ..../001	78	26			26.4				260
10 31 0840 ..../001	84	28			28.4				280
10 31 0900 ..../001	90	30			30.4				300
10 31 0960 ..../001	96	32			32.4				320
10 31 1020 ..../001	102	34	3	4	34.4	+0.3 0	3	2.5	340
10 31 1080 ..../001	108	36			36.4				360
10 31 1140 ..../001	114	38			38.4				380
10 31 1200 ..../001	120	40			40.4				400
10 31 1260 ..../001	126	42			42.4				420
10 31 1320 ..../001	132	44			44.4				440
10 31 1350 ..../001	135	45			45.4				450
10 31 1380 ..../001	138	46			46.4				460
10 31 1440 ..../001	144	48			48.4				480
10 31 1500 ..../001	150	50			50.5				500
10 31 1590 ..../001	159	53			53.5				530
10 31 1680 ..../001	168	56			56.5				560
10 31 1800 ..../001	180	60			60.5				600
10 31 1890 ..../001	189	63			63.5				630

2) the last 4 digits before the / (....) are intended to denote length l

Material: E 335 (St 60-2), bright

Special steels/stainless steel on request
Special versions upon request

With shaft diameters between those listed in the table, it is recommended that the wedge thickness t1 of the next shaft diameter down be selected. The width b is calculated from: $b = \sqrt{t1 \cdot (d - t1)}$.
For shaft diameters of above 630 mm we recommend: t1 = 0.1 d, b = 0.3 d.

If no alternating shock loads occur, tangential keys to DIN 271 are recommended. The 125 mm shaft diameter to the ISO recommendation R 775 and the planned ISO recommendation on tangential keys is not included in DIN 748 Sheet 1.

20_02
12/2012

mbo Osswald GmbH & Co KG
Metal processing · Linking technology

www.mbo-osswald.com · info@mbo-osswald.de
Tel: + 49 (0) 9345-670-0 · Fax: + 49 (0) 9345-6255

General tolerances
DIN ISO 2768-medium

Subject to technical alterations

We accept no responsibility for incorrect or incomplete details or information given

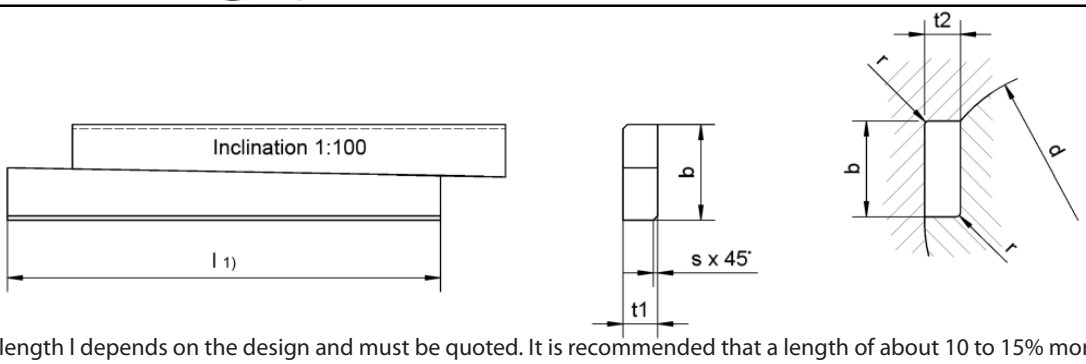

1) The length l depends on the design and must be quoted. It is recommended that a length of about 10 to 15% more than the hub length be selected.

Example for ordering: Tangential key according to DIN 271, b = 33.9 mm, t1 = 10 mm, l = 100 mm, bright; Order number: 10 32 0339 1000/001

Order number[2] - in pairs -	b Calculated	Key t1 h11	Key s min.	Key s max.	Groove t2	Groove t2 perm. diff.	Groove r max.	Groove r min.	For shaft diameter d
10 32 0193 ..../001	19.3	7	0.6	0.8	7.3	+0.2 0	0.6	0.4	60
10 32 0198 ..../001	19.8								63
10 32 0202 ..../001	20.2								65
10 32 0210 ..../001	21								70
10 32 0225 ..../001	22.5	8			8.3				71
10 32 0232 ..../001	23.2								75
10 32 0240 ..../001	24								80
10 32 0248 ..../001	24.8								85
10 32 0256 ..../001	25.6								90
10 32 0278 ..../001	27.8	9			9.3				95
10 32 0286 ..../001	28.6								100
10 32 0301 ..../001	30.1								110
10 32 0332 ..../001	33.2	10	1	1.2	10.3		1	0.7	120
10 32 0339 ..../001	33.9								125
10 32 0346 ..../001	34.6								130
10 32 0377 ..../001	37.7	11			11.4				140
10 32 0391 ..../001	39.1								150
10 32 0421 ..../001	42.1	12	1	1.2	12.4	+0.3 0	1	0.7	160
10 32 0435 ..../001	43.5								170
10 32 0449 ..../001	44.9								180
10 32 0496 ..../001	49.6	14			14.4				190
10 32 0510 ..../001	51		1.6	2			1.6	1.2	200
10 32 0571 ..../001	57.1	16			16.4				220
10 32 0599 ..../001	59.9								240
10 32 0646 ..../001	64.6	18			18.4				250
10 32 0660 ..../001	66								260
10 32 0721 ..../001	72.1	20	2.5	3	20.4		2.5	2	280
10 32 0748 ..../001	74.8								300
10 32 0810 ..../001	81	22			22.4				320
10 32 0836 ..../001	83.6								340
10 32 0932 ..../001	93.2	26			26.4				360
10 32 0956 ..../001	95.9								380
10 32 0986 ..../001	98.6								400
10 32 1082 ..../001	108.2	30	3	4	30.4		3	2.5	420
10 32 1109 ..../001	110.9								440
10 32 1123 ..../001	112.3								450
10 32 1136 ..../001	113.6								460
10 32 1231 ..../001	123.1	34			34.4				480
10 32 1259 ..../001	125.9								500
10 32 1367 ..../001	136.7	38			38.4				530
10 32 1408 ..../001	140.8								560
10 32 1531 ..../001	153.1	42			42.4				600
10 32 1571 ..../001	157.1								630

2) the last 4 digits before the / (....) are intended to denote length l

Material: E 335 (St 60-2), bright

Special steels/stainless steel on request
Special versions upon request

With shaft diameters between those listed in the table, it is recommended that the wedge thickness t1 of the next shaft diameter down be selected. The width b is calculated from: $b = \sqrt{t1 \cdot (d - t1)}$.
For shaft diameters of above 630 mm we recommend: t1 = 0.07 d, b = 0.25 d.

If alternating shock loads occur, tangential keys to DIN 268 are recommended for the 100 mm shaft diameters.
The 63, 71 and 125 shaft diameters to the ISO recommendation R 775 and the planned ISO recommendation on tangential keys are not included in DIN 748 Sheet 1.

20_03
12/2012

mbo Osswald GmbH & Co KG
Metal processing · Linking technology

www.mbo-osswald.com · info@mbo-osswald.de
Tel: + 49 (0) 9345-670-0 · Fax: + 49 (0) 9345-6255

General tolerances
DIN ISO 2768-medium

Subject to technical alterations

We accept no responsibility for incorrect or incomplete details or information given

Form A: round-ended

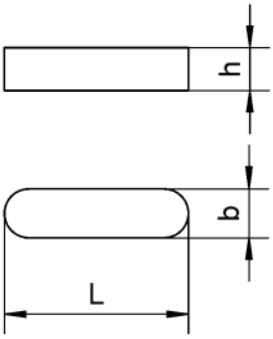

Form B: straight-ended

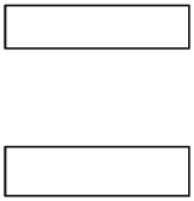

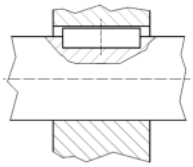

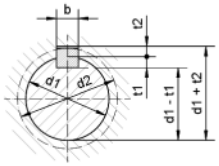

chamfering (all sides)
bevelled rounded
of manufacturer's choice

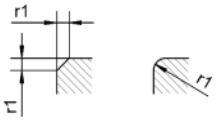

rounding of groove bottom
for shaft and hub

Example for ordering: Parallel key according to DIN 6885 high-sized version, b = 10 mm, h = 8 mm, L = 70 mm, form A round-ended, bright;
Order number: 10 37 1008 0700/001

Form C up to form J upon request

Order number[1)2)]	Width b	Height h	For shaft diameter d1 above	to	Shaft groove Width b	Depth t1 with back clearance	Depth t1 or oversize perm. diff.	Hub groove Width b	Depth t2 with back clearance	Depth t2 perm. diff.	Depth t2 with oversize	Depth t2 perm. diff.	d2 Minimum dimension d1[+)]	Bevelled/ rounded r1 min.	r1 max.	Rounding of groove bottom r2 min.	r2 max.	Length L from	L to	L perm. diff. Spring	L perm. diff. Groove
.. 37 0202 ..../001	2	2	6	8	2	1.2		2	1		0.5		2.5					6	20	-0.2	+0.2
.. 37 0303 ..../001	3	3	8	10	3	1.8		3	1.4		0.9		3.5	0.16	0.25	0.16	0.08	6	36		
.. 37 0404 ..../001	4	4	10	12	4	2.5	+0.1	4	1.8	+0.1	1.2	+0.1	4					8	45	-0.2	+0.2
.. 37 0505 ..../001	5	5	12	17	5	3		5	2.3		1.7		5					10	56	-0.3	+0.3
.. 37 0606 ..../001	6	6	17	22	6	3.5		6	2.8		2.2		6	0.25	0.4	0.25	0.16	14	70		
.. 37 0807 ..../001	8	7	22	30	8	4		8	3.3		2.4		8					18	90	-0.2	+0.2
.. 37 1008 ..../001	10	8	30	38	10	5		10	3.3		2.4		8					22	110	-0.3	+0.3
.. 37 1208 ..../001	12	8	38	44	12	5		12	3.3		2.4		8					28	140	-0.5	+0.5
.. 37 1409 ..../001	14	9	44	50	14	5.5		14	3.8		2.9		9	0.4	0.6	0.4	0.25	36	160		
.. 37 1610 ..../001	16	10	50	58	16	6		16	4.3		3.4		11					45	180		
.. 37 1811 ..../001	18	11	58	65	18	7	+0.2	18	4.4	+0.2	3.4	+0.2	11					50	200	-0.3	+0.3
.. 37 2012 ..../001	20	12	65	75	20	7.5		20	4.9		3.9		12					56	220	-0.5	+0.5
.. 37 2214 ..../001	22	14	75	85	22	9		22	5.4		4.4		14					63	250		
.. 37 2514 ..../001	25	14	85	95	25	9		25	5.4		4.4		14	0.6	0.8	0.6	0.4	70	280		
.. 37 2816 ..../001	28	16	95	110	28	10		28	6.4		5.4		16					80	320		
.. 37 3218 ..../001	32	18	110	130	32	11		32	7.4		6.4		18					90	360		
.. 37 3620 ..../001	36	20	130	158	36	12		36	8.4		7.1		21					100	400		
.. 37 4022 ..../001	40	22	150	170	40	13		40	9.4		8.1		23	1	1.2	1	0.7	110	400		
.. 37 4525 ..../001	45	25	170	200	45	15		45	10.4		9.1		26					125	400		
.. 37 5028 ..../001	50	28	200	230	50	17		50	11.4		10.1		28					140	400		
.. 37 5632 ..../001	56	32	230	260	56	20	+0.3	56	12.4	+0.3	11.1	+0.3	32					160	400	-0.5	+0.5
.. 37 6332 ..../001	63	32	260	290	63	20		63	12.4		11.1		32	1.6	2	1.6	1.2	180	400		
.. 37 7036 ..../001	70	36	290	330	70	22		70	14.4		13.1		36					200	400		
.. 37 8040 ..../001	80	40	330	380	80	25		80	15.4		14.1		40					220	400		
.. 37 9045 ..../001	90	45	380	440	90	28		90	17.4		16.1		45	2.5	3	2.5	2	250	400		
.. 37 0050 ..../001	100	50	440	500	100	31		100	19.5		18.1		50					280	400		

1) The last 4 digits before the / (....) are intended to denote length L. Please clearly indicate L.

2) The two first digits (..) indicate: 10 = form A (round end) and 11 = form B (straight end). Please clearly indicate this.

Material:
for parallel key heights h up to 25 mm: St 50-1 K
for parallel key heights h above 25 mm: St 60-2
alternative: stainless steel
(supplement to order number .../000)

Surface protection:

Identifier	Supplement to order number
bright	.../001
electr. galvanised white (layer min. 5 µm)	.../013

20_04
12/2012

Special versions upon request

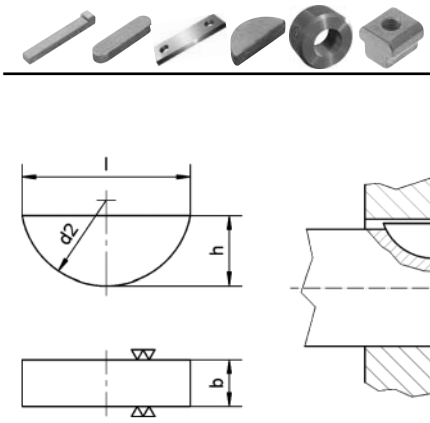

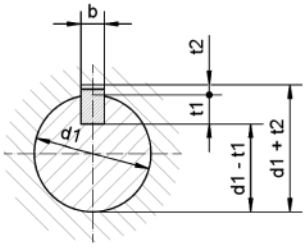

chamfering (all sides)
bevelled rounded
of manufacturer's choice

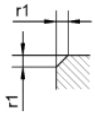

rounding of groove bottom
for shaft and hub

Example for ordering: Woodruff key according to DIN 6888, b = 6 mm, h = 7.5 mm, bright;
Order number: 10 34 0060 0075/001

Order number	Width b	Height h	For shaft diameter d1[1] Allocation I		For shaft diameter d1[1] Allocation II		Dia-meter d2		Bevelled/ rounded r1		Length l ≈	Shaft groove					Hub groove					Rounding of groove bottom r2	
												Width firm seat P9 loose seat N9 b[2]	Depth t1[3] Row A	Depth t1[3] Row B	Diff. for A u. B	Ø d2 +0.5	Width firm seat P9 loose seat J9 b[2][6]	Depth t2[3] Row A[4]	Depth t2[3] Row B[5]	perm. diff. for A	perm. diff. for B		
	h9	h12	above	up to	above	up to		perm. diff.		perm. diff.													perm. diff.
10 34 0010 0014/001	1	1.4	3	4	6	8	4	-0.1	0.2	+0.1	3.82	1	1	1	+0.1	4	1	0.6	0.6	+0.1	+0.1	0.2	-0.1
10 34 0015 0026/001	1.5	2.6	4	6	8	10	7		0.2		6.76	1.5	2	2		7	1.5	0.8	0.8			0.2	
10 34 0020 0026/001	2	2.6	6	8	10	12	7		0.2		6.76	2	1.8	1.8		7	2	1	1			0.2	
10 34 0020 0037/001	2	3.7	6	8	10	12	10		0.2		9.66	2	2.9	2.9		10	2	1	1			0.2	
10 34 0025 0037/001	2.5*	3.7	8	10	12	17	10		0.2		9.66	2.5	2.9	2.9		10	2.5	1	1			0.2	
10 34 0030 0037/001	3	3.7	8	10	12	17	10		0.2		9.66	3	2.5	2.8		10	3	1.4	1.1			0.2	
10 34 0030 0050/001	3	5	8	10	12	17	13		0.2		12.65	3	3.8	4.1		13	3	1.4	1.1			0.2	
10 34 0030 0065/001	3	6.5	-	-	12	17	16		0.2		15.72	3	5.3	5.6		16	3	1.4	1.1			0.2	
10 34 0040 0050/001	4	5	10	12	17	22	13		0.2		12.65	4	3.5	4.1		13	4	1.7	1.1			0.2	
10 34 0040 0065/001	4	6.5	10	12	17	22	16		0.2		15.72	4	5	5.6		16	4	1.7	1.1			0.2	
10 34 0040 0075/001	4	7.5	-	-	17	22	19		0.2		18.57	4	6	6.6		19	4	1.7	1.1			0.2	
10 34 0050 0065/001	5	6.5	12	17	22	30	16		0.2		15.72	5	4.5	5.4		16	5	2.2	1.3			0.2	
10 34 0050 0075/001	5	7.5	12	17	22	30	19		0.2		18.57	5	5.5	6.4		19	5	2.2	1.3			0.2	
10 34 0050 0090/001	5	9	-	-	22	30	22		0.2		21.63	5	7	7.9	+0.2	22	5	2.2	1.3			0.2	
10 34 0060 0075/001	6	7.5	17	22	30	38	19		0.4	+0.2	18.57	6	5.1	6	+0.1	19	6	2.6	1.7			0.4	-0.2
10 34 0060 0090/001	6	9	17	22	30	38	22		0.4		21.63	6	6.6	7.5		22	6	2.6	1.7			0.4	
10 34 0060 0100/001	6	(10)	17	22	30	38	25	-0.2	0.4		24.49	6	7.6	8.5	+0.2	25	6	2.6	1.7			0.4	
10 34 0060 0110/001	6	11	-	-	30	38	28		0.4		27.35	6	8.6	9.5		28	6	2.6	1.7			0.4	
10 34 0080 0090/001	8	9	22	30	38	-	22	-0.1	0.4		21.63	8	6.2	7.5		22	8	3	1.7			0.4	
10 34 0080 0110/001	8	11	22	30	38	-	28	-0.2	0.4		27.35	8	8.2	9.5		28	8	3	1.7			0.4	
10 34 0080 0130/001	8	13	-	-	38	-	32		0.4		31.43	8	10.2	11.5		32	8	3	1.7			0.4	
10 34 0100 0110/001	10	11	30	38	38	-	28		0.4		27.35	10	7.8	9.1		28	10	3.4	2.1	+0.2		0.4	
10 34 0100 0130/001	10	13	30	38	38	-	32		0.4		31.43	10	9.8	11.1		32	10	3.4	2.1			0.4	
10 34 0100 0160/001	10	16	-	-	38	-	45		0.4		43.08	10	12.8	14.1		45	10	3.4	2.1			0.4	

* only for motor vehicle construction

1) For connection dimensions, in particular of shaft ends, the allocation of the woodruff key cross-sections to the shaft diameters must be maintained.
Allocation I applies wherever the woodruff keys are used like parallel keys, i.e. to transmit the entire torque.
Allocation II applies wherever the woodruff key is used only for fixing the position of the drive element and for transmitting the torque of other elements, e.g. cotter or taper.

2) The permissible differences for the groove widths apply only as a guideline. It is recommended to comply with ISA grade IT 8 instead of IT 9 for the widths of reamed grooves (i.e. P 8 instead of P 9. N 8 instead of N 9 and J 8 instead of J 9).

3) In the shop drawings, the dimensions t1 and (d1 – t1) plus t2 and (d1 + t2) can be entered adjacently to one another, however in many cases the dimensions t1 and (d1 + t2) are sufficient. It may be necessary here to take into account the permissible differences and machining allowances of shaft and hub bore.

4) Use row A (high hub groove) for preference, conforms to DIN 6885 Sheet 1 (t2 with back clearance).

5) Row B (low hub groove) for machine tools, conforms to DIN 6885 Sheet 2.

6) With allocation II of the woodruff keys to the shaft diameters the tolerance field D 10 can also be selected.

Material: St 60
alternative: stainless steel
(supplement to order number .../000)

Special versions upon request

Surface protection:

Identifier	Supplement to order number
bright	.../001
electr. galvanised white (layer min. 5 µm)	.../013

20_05
12/2012

mbo Osswald GmbH & Co KG
Metal processing · Linking technology

www.mbo-osswald.com · info@mbo-osswald.de
Tel: + 49 (0) 9345-670-0 · Fax: + 49 (0) 9345-6255

General tolerances
DIN ISO 2768-medium

Subject to technical alterations

We accept no responsibility for incorrect or incomplete details or information given

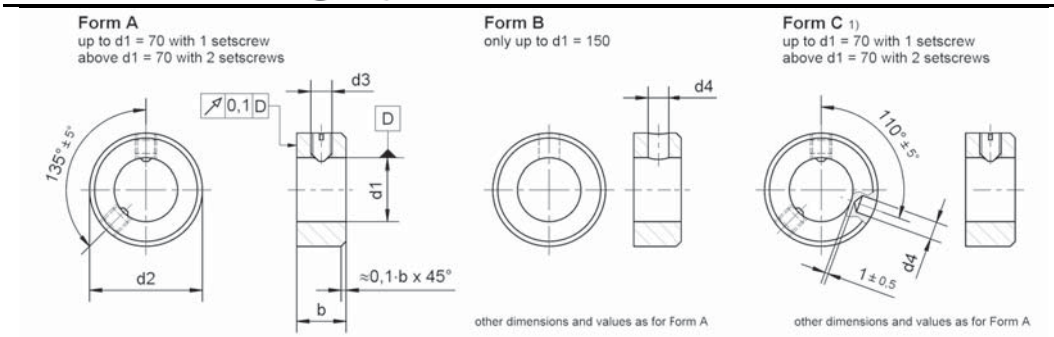

* Please specify the desired form A, B or C (e.g. …0020A/…)

d1 H8[2] Row 1[3]	d1 H8[2] Row 2[4]	Order number*	b js14[2]	d2 h13[2]	d3	d4 H11[2]	Setscrew[5]	Optional: Grooved pin DIN EN ISO 8744[6]	Optional: Taper pin DIN EN 22339[7]	Weight kg/100 pcs. ≈ Form A	Weight kg/100 pcs. ≈ Form B Form C
2		10 36 0000 0020*/...	3.5	6	M 2	0.6	M 2 x 3	-	0.6 x 6	0.069	0.065
2.5		10 36 0000 0025*/...	4	7	M 2	0.8	M 2 x 3	-	0.8 x 6	0.105	0.096
3		10 36 0000 0030*/...	5	7	M 2	0.8	M 2 x 3	-	0.8 x 6	0.123	0.115
	3.5	10 36 0000 0035*/...	5	8	M 2.5	1	M 2.5 x 3	-	1 x 8	0.162	0.155
4		10 36 0000 0040*/...	5	8	M 2.5	1	M 2.5 x 3	-	1 x 8	0.152	0.145
	4.5	10 36 0000 0045*/...	6	10	M 3	1.5	M 3 x 4	1.5 x 10	1.5 x 10	0.296	0.289
5		10 36 0000 0050*/...	6	10	M 3	1.5	M 3 x 4	1.5 x 10	1.5 x 10	0.28	0.273
	5.5	10 36 0000 0055*/...	6	12	M 4	1.5	M 4 x 5	1.5 x 12	1.5 x 12	0.432	0.414
6		10 36 0000 0060*/...	8	12	M 4	1.5	M 4 x 5	1.5 x 12	1.5 x 12	0.548	0.526
	7	10 36 0000 0070*/...	8	12	M 4	1.5	M 4 x 5	1.5 x 12	1.5 x 12	0.488	0.464
8		10 36 0000 0080*/...	8	16	M 4	2	M 4 x 6	2 x 16	2 x 16	0.94	0.92
10		10 36 0000 0100*/...	10	20	M 5	3	M 5 x 8	3 x 20	3 x 20	1.85	1.8
12		10 36 0000 0120*/...	12	22	M 6	4	M 6 x 8	4 x 22	4 x 20	2.52	2.44
14		10 36 0000 0140*/...	12	25	M 6	4	M 6 x 8	4 x 24	4 x 25	3.17	3.09
	15	10 36 0000 0150*/...	12	25	M 6	4	M 6 x 8	4 x 24	4 x 25	2.98	2.88
16		10 36 0000 0160*/...	12	28	M 6	4	M 6 x 8	4 x 28	4 x 25	3.84	3.76
18		10 36 0000 0180*/...	14	32	M 6	5	M 6 x 8	5 x32	5 x30	6	5.84
20		10 36 0000 0200*/...	14	32	M 6	5	M 6 x 8	5 x32	5 x30	5.3	5.2
22		10 36 0000 0220*/...	14	36	M 6	5	M 6 x 10	5 x36	5 x35	6.9	6.79
	24	10 36 0000 0240*/...	16	40	M 8	6	M 8 x 12	6 x 40	6 x 40	10	9.8
25		10 36 0000 0250*/...	16	40	M 8	6	M 8 x 10	6 x 40	6 x 40	9.59	9.32
	26	10 36 0000 0260*/...	16	40	M 8	6	M 8 x 10	6 x 40	6 x 40	9.05	8.83
28		10 36 0000 0280*/...	16	45	M 8	6	M 8 x 12	6 x 45	6 x 45	12.2	11.9
	30	10 36 0000 0300*/...	16	45	M 8	6	M 8 x 10	6 x 45	6 x 45	11.1	10.8
32		10 36 0000 0320*/...	16	50	M 8	8	M 8 x 12	8 x 50	8 x 50	14.5	14
	35	10 36 0000 0350*/...	16	56	M 8	8	M 8 x 12	8 x 55	8 x 55	18.7	18.2
36		10 36 0000 0360*/...	16	56	M 8	8	M 8 x 12	8 x 55	8 x 55	18	17.6
40		10 36 0000 0400*/...	18	63	M 10	8	M 10 x 16	8 x 60	8 x 60	26.1	25.6
45		10 36 0000 0450*/...	18	70	M 10	8	M 10 x 16	8 x 70	8 x 70	31.7	31
50		10 36 0000 0500*/...	18	80	M 10	10	M 10 x 16	10 x 80	10 x 80	42.9	42.1
	55	10 36 0000 0550*/...	18	80	M 10	10	M 10 x 16	10 x 80	10 x 80	37.3	36.4
56		10 36 0000 0560*/...	18	80	M 10	10	M 10 x 16	10 x 80	10 x 80	36.1	35.2
	60	10 36 0000 0600*/...	20	90	M 10	10	M 10 x 16	10 x 90	10 x 90	55.2	54.3
63		10 36 0000 0630*/...	20	90	M 10	10	M 10 x 16	10 x 90	10 x 90	50.8	49.8
	65	10 36 0000 0650*/...	20	100	M 10	10	M 10 x 20	10 x 100	10 x 100	70.8	69.8
70		10 36 0000 0700*/...	20	100	M 10	10	M 10 x 20	10 x 100	10 x 100	62.6	61.6
	75	10 36 0000 0750*/...	22	110	M 12	10	M 12 x 20	10 x 110	10 x 110	87.1	86
80		10 36 0000 0800*/...	22	110	M 12	10	M 12 x 20	10 x 110	10 x 110	76.8	75.5
	85	10 36 0000 0850*/...	22	125	M 12	12	M 12 x 25	12 x 120	12 x 120	113	111
90		10 36 0000 0900*/...	22	125	M 12	12	M 12 x 20	12 x 120	12 x 120	101	99
100		10 36 0000 1000*/...	25	140	M 12	12	M 12 x 25	-	12 x 140	147	145
110		10 36 0000 1100*/...	25	160	M 12	12	M 12 x 30	-	12 x 160	206	204
	120	10 36 0000 1200*/...	25	160	M 12	12	M 12 x 25	-	12 x 160	171	169
125		10 36 0000 1250*/...	28	180	M 16	16	M 16 x 35	-	16 x 180	285	282
140		10 36 0000 1400*/...	28	200	M 16	16	M 16 x 35	-	16 x 200	347	343
	150	10 36 0000 1500*/...	28	200	M 16	16	M 16 x 30	-	16 x 200	298	294
160		10 36 0000 1600*/...	32	220	M 20	-	M 20 x 35	-	-	446	-
180		10 36 0000 1800*/...	32	250	M 20	-	M 20 x 40	-	-	590	-
200		10 36 0000 2000*/...	32	280	M 20	-	M 20 x 45	-	-	756	-

1) With form C the setscrew is used as an assembly aid for fixing the set collar during drilling of the pin hole.
2) The specified tolerances only apply to the "bright" version. Other tolerances must be specified when ordering.
3) The row 1 nominal diameters should preferably be used above all for new designs.
4) The nominal diameters of row 2 contain sizes that are currently still needed in practice, but should no longer be used in new structures.
5) Unlike grooved and taper pins, setscrews (up to M 10 with slot to DIN EN 27434 and above M 12 with internal hexagon to DIN EN ISO 4027) are an integral part of the set collar.
6) Instead of grooved pins to DIN EN ISO 8744, it is also possible to use dowel pins to DIN EN ISO 8752 or spiral dowel pins to DIN EN ISO 8750.
7) If taper pins to DIN EN 22339 are used, the hole must be reamed during assembly with a 1:50 taper.

Material:

11SMnPb30+C or equivalent material
alternative: stainless steel
(supplement to order number .../000)

Special versions upon request

Surface protection:

Identifier	Supplement to order number
bright	.../001
electr. galvanised white (layer min. 5 µm)	.../013

20_06
12/2012

mbo Osswald GmbH & Co KG
Metal processing · Linking technology

www.mbo-osswald.com · info@mbo-osswald.de
Tel: + 49 (0) 9345-670-0 · Fax: + 49 (0) 9345-6255

General tolerances
DIN ISO 2768-medium

Subject to technical alterations

We accept no responsibility for incorrect or incomplete details or information given

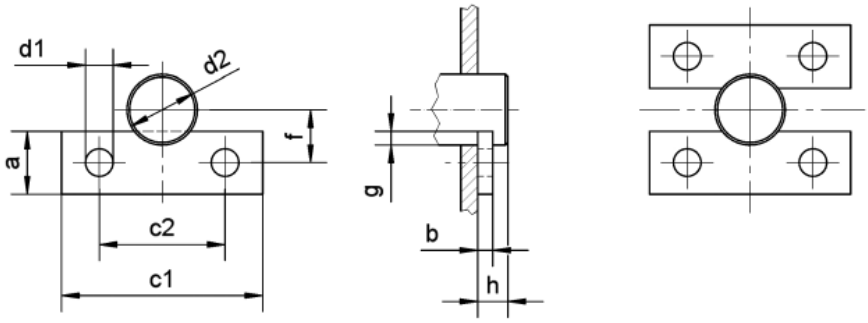

Example for ordering: Axle holders according to DIN 15058, a = 30 mm, b = 8 mm, bright;
Order number: 10 35 0000 0030/001

For axle diameter d2 Range	Preferred diameter	Order number	a	b[1]	c1	c2	d1[2]	f	g	h	Fastening screws thread according to DIN 13 Sheet 1 Regular thread	Sheet 5 and 6 Fine-pitch thread	Weight kg/pcs. ≈
above 16 up to 25	18	10 35 0000 0020/...	20	5	60	36	9	16	3	10	M 8	M 8x1	0.042
	20								4				
	22							17					
	25							18	4.5				
above 25 up to 40	28	10 35 0000 0025/...	25	6	80	50	11	22	4.5	12	M 10	M 10x1	0.085
	(30)								5.5				
	32							23					
	(35)							24	6				
	36								6.5				
	40							26					
above 40 up to 63	45	10 35 0000 0030/...	30	8	100	70	13	31	6.5	16	M 12	M 12x1.5	0.19
	50							33	7				
	(55)							35	7.5				
	56								8				
	(60)							36	9				
	63							37	9.5				
above 63 up to 100	70	10 35 0000 0040/...	40	10	140	100	17	45	10	20	M 16	M 16x1.5	0.4
	(75)							47	10.5				
	80							48	12				
	90							52	13				
	100							56	14				
above 100 up to 160	110	10 35 0000 0050/...	50	12	190	140	21	65	15	25	M 20	M 20x1.5	0.9
	125							71	16.5				
	140							77	18				
	160							85	20				
above 160 up to 250	180	10 35 0000 0060/...	60	16	250	200	25	98	22	32	M 24	M 24x1.5	1.75
	200							105	25				
	220							112	28				
	250							125	30				

avoid sizes quoted in brackets wherever possible
1) the width of the groove in the axle depends on the operating conditions and the semi-finished product used for the axle holder
2) state other hole diameters when ordering

Material: St 37 - 1
alternative: stainless steel
(supplement to order number .../000)

Special versions upon request

Surface protection:

Identifier	Supplement to order number
bright	.../001
electr. galvanised white (layer min. 5 µm)	.../013

20_07
12/2012

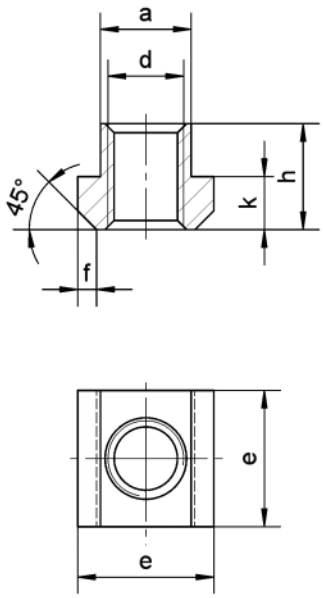

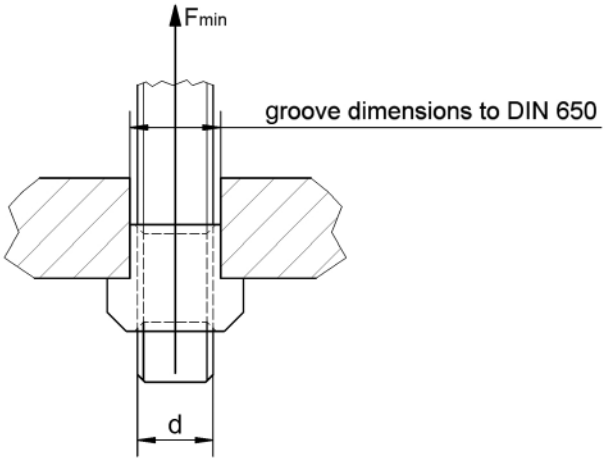

Example for ordering: Nut for T-slots according to DIN 508, d = M 12, a = 14 mm, bright;
Order number: 10 33 0508 0012/001

Order number	d	a	Tolerance	e	Tolerance	f	h	k	Tolerance	Weight g/pcs. ≈	For T-slots acc. DIN 650	Test force F_{min} N • 10^3
10 33 0508 0004/...	M 4	5	-0.3 -0.5	9	0 -0.5	1	6.5	3	0/-0.3	2.5	5	7
10 33 0508 0005/...	M 5	6		10		1.6	8	4	0 -0.5	4	6	11.4
10 33 0508 0006/...	M 6	8		13			10	6		10	8	16
10 33 0508 0008/...	M 8	10		15	0 -0.5	1.6	12	6	0 -0.5	18	10	29
10 33 0508 0010/...	M 10	12	-0.3 -0.6	18		2.5	14	7		24	12	46
10 33 0508 0012/...	M 12	14		22			16	8		35	14	67
10 33 0508 0016/...	M 16	18		28	0 -0.5	2.5	20	10	0 -0.5	75	18	126
10 33 0508 0020/...	M 20	22		35			28	14		165	22	196
10 33 0508 0024/...	M 24	28		44	0/-1	4	36	18	0/-1	345	28	282
10 33 0508 0030/...	M 30	36	-0.4 -0.7	54	0 -1	6	44	22	0 -1	770	36	448
10 33 0508 0036/...	M 36	42		65			52	26		1030	42	653
10 33 0508 0042/...	M 42	48		75			60	30		1550	48	653
10 33 0508 0048/...	M 48	54	-0.4/-0.8	85	0/-1	6	70	34	0/-1	2300	54	653

Material:
steel of manufacturer's choice

Hardness:

Thread d	Hardness
M4	≥ 170 HV
M5 - M36	≥ 188 HV
> M36	≥ 180 HV

Special steels/stainless steel on request
Special versions upon request

Surface protection:

Identifier	Supplement to order number
bright	.../001
electr. galvanised white (layer min. 5 µm)	.../013

20_08
12/2012