Cotter bolts

according to DIN EN 22340/ISO 2340

form A without pin holes

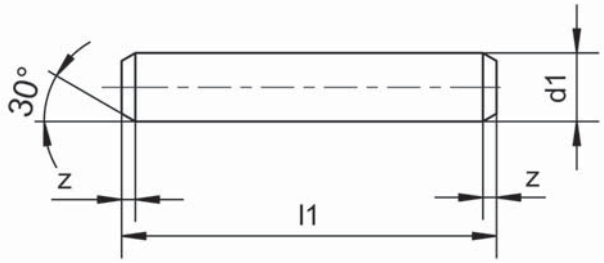

form B with pin holes

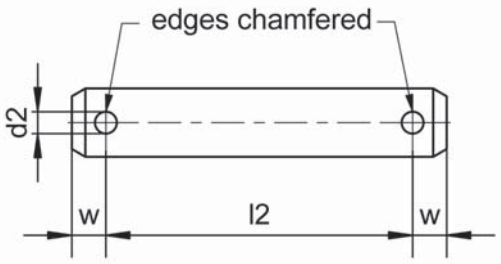

Example for ordering: **form A:** Bolt without pin holes according to DIN EN 22340/ISO 2340, d=10mm, l=30mm, electroplated galvanised yellow;
Bolt ISO 2340 – A – 10 x 30 galvanised yellow
Order number: 40 10 0000 0030/023

form B: Bolt with pin holes according to DIN EN 22340/ISO 2340, d=10mm, l=30mm, lh=20mm, electroplated galvanised white;
Bolt ISO 2340 – B – 10 x 30 x 20 galvanised white
Order number: 40 10 0030 0020/013

d h11			4	5	6	8	10	12	14	16	18	20	22	24	up to 60
dl H13			1	1.2	1.6	2	3.2	3.2	4	4	5	5	5	6.3	upon request
c max.			1	2	2	2	2	3	3	3	3	4	4	4	
le min.			2.2	2.9	3.2	3.5	4.5	5.5	6	6	7	8	8	9	
Nom. size	l min.	l max.													
6	5.75	6.25													
8	7.75	8.25													
10	9.75	10.25													
12	11.5	12.5													
14	13.5	14.5													
16	15.5	16.5													
18	17.5	18.5													
20	19.5	20.5													
22	21.5	22.5													
24	23.5	24.5													
26	25.5	26.5		Range											
28	27.5	28.5													
30	29.5	30.5													
32	31.5	32.5				of									
35	34.5	35.5													
40	39.5	40.5													
45	44.5	45.5						standard							
50	49.5	50.5													
55	54.25	55.75													
60	59.25	60.75													
65	64.25	65.75													
70	69.25	70.75													
75	74.25	75.75									lengths				
80	79.25	80.75													
85	84.25	85.75													
90	89.25	90.75													
95	94.25	95.75													
100	99.25	100.75													
up to 200			upon request												

Material:
1.0718 (11SMnPb30+C)
alternative: stainless steel 1.4305 (X8CrNiS18-9)
(supplement to order number .../000)
stainless steel 1.4404 (X2CrNiMo17-12-2)
(supplement to order number .../4404)
hardened bolts upon request

Retaining:
form A: with retainers
(mbo catalogue section 14/page 58-61)
form B: with washers and cotter pins

Surface protection:

Identifier	Supplement to order number
bright	.../003
phosphatised oiled	.../002
electr. galvanised white (layer min. 5 µm)	.../013
electr. galvanised yellow (layer min. 5 µm)	.../023

Dimensions also available in acc. with DIN 1433 and DIN 1443

Special versions upon request

12_01
12/2012

mbo Osswald GmbH & Co KG
Metal processing · Linking technology
www.mbo-osswald.com · info@mbo-osswald.de
Tel: + 49 (0) 9345-670-0 · Fax: + 49 (0) 9345-6255

General tolerances
DIN ISO 2768-medium
Subject to technical alterations
We accept no responsibility for incorrect or incomplete details or information given

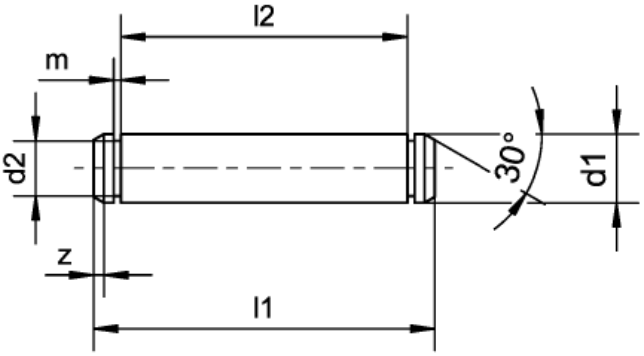

dia. d1: 4 mm - 65 mm
length l1: 10 mm - 300 mm

Material:
1.0718 (11SMnPb30+C)
alternative: stainless steel 1.4305 (X8CrNiS18-9)
stainless steel 1.4404 (X2CrNiMo17-12-2)
hardened bolts upon request

Special versions upon request

Surface protection:
phosphatised and oiled;
optional: electroplated galvanised, passivated in white-blue (silver/clear) or yellow

Retaining:
with retainers
(mbo catalogue section 13/page 53-57)

12_02
08/2011

Bolts with head

according to DIN EN 22341/ISO 2341

form A without pin hole

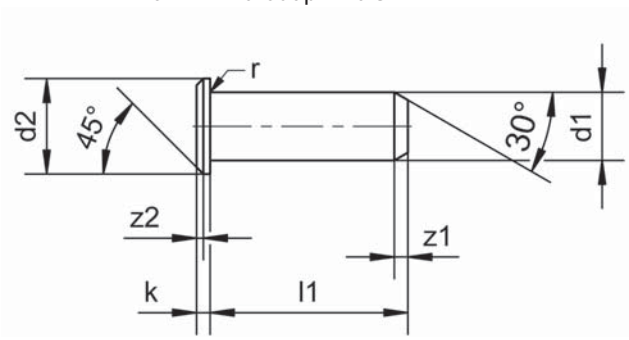

form B with pin hole

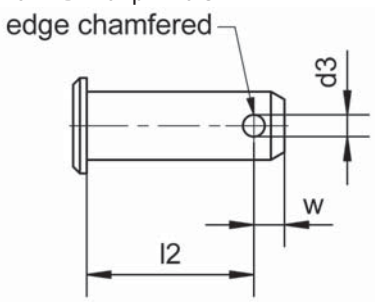

Example for ordering: **form A:** Bolt without pin hole according to DIN EN 22341/ISO 2341, d=10mm, l=50mm, electroplated galvanised white;
Bolt ISO 2341 – A – 10 x 50 galvanised white, Order number: 41 10 0000 0030/013

form B: Bolt with pin hole according to DIN EN 22341/ISO 2341, d=10mm, l=30mm, lh=20mm, bright;
Bolt ISO 2341 – B – 10 x 50 x 44 bright, Order number: 41 10 0050 0044/003

d h11			4	5	6	8	10	12	14	16	18	20	22	24	up to 50
dk h14			6	8	10	14	18	20	22	25	28	30	33	36	upon request
dl H13			1	1.2	1.6	2	3.2	3.2	4	4	5	5	5	6.3	
c max.			1	2	2	2	2	3	3	3	3	4	4	4	
e ≈			0.5	1	1	1	1	1.6	1.6	1.6	1.6	2	2	2	
k js14			1	1.6	2	3	4	4	4	4.5	5	5	5.5	6	
le min.			2.2	2.9	3.2	3.5	4.5	5.5	6	6	7	8	8	9	
r			0.6	0.6	0.6	0.6	0.6	0.6	0.6	0.6	1	1	1	1	
Nom. size	l min.	l max.													
6	5.75	6.25													
8	7.75	8.25													
10	9.75	10.25													
12	11.5	12.5													
14	13.5	14.5													
16	15.5	16.5													
18	17.5	18.5													
20	19.5	20.5													
22	21.5	22.5													
24	23.5	24.5													
26	25.5	26.5													
28	27.5	28.5													
30	29.5	30.5													
32	31.5	32.5													
35	34.5	35.5													
40	39.5	40.5													
45	44.5	45.5													
50	49.5	50.5													
55	54.25	55.75													
60	59.25	60.75													
65	64.25	65.75													
70	69.25	70.75													
75	74.25	75.75													
80	79.25	80.75													
85	84.25	85.75													
90	89.25	90.75													
95	94.25	95.75													
100	99.25	100.75													
up to 200			upon request												

Range of standard lengths

Material:
1.0718 (11SMnPb30+C)
alternative: stainless steel 1.4305 (X8CrNiS18-9)
(supplement to order number .../000)
stainless steel 1.4404 (X2CrNiMo17-12-2)
(supplement to order number .../4404)
hardened bolts upon request

Retaining:
form A: with retainers
(mbo catalogue section 14/page 58-61)
form B: with washers and cotter pins

Surface protection:

Identifier	Supplement to order number
bright	.../003
phosphatised oiled	.../002
electr. galvanised white (layer min. 5 µm)	.../013
electr. galvanised yellow (layer min. 5 µm)	.../023

Dimensions also available in acc. with DIN 1434, DIN 1435, DIN 1436 and DIN 1444

Special versions upon request

12_03
12/2012

mbo Osswald GmbH & Co KG
Metal processing · Linking technology

www.mbo-osswald.com · info@mbo-osswald.de
Tel: + 49 (0) 9345-670-0 · Fax: + 49 (0) 9345-6255

General tolerances
DIN ISO 2768-medium

Subject to technical alterations

We accept no responsibility for incorrect or incomplete details or information given

head version of
manufacturer's choice

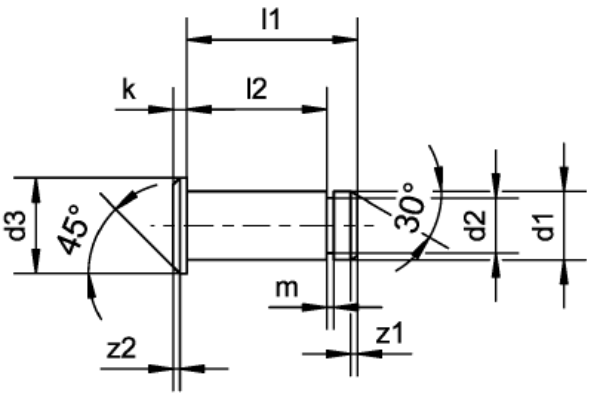

dia. d1: 4 mm - 50 mm
length l1: 10 mm - 300 mm

Material:
1.0718 (11SMnPb30+C)
alternative: stainless steel 1.4305 (X8CrNiS18-9)
stainless steel 1.4404 (X2CrNiMo17-12-2)
hardened bolts upon request

Surface protection:
phosphatised and oiled;
optional: electroplated galvanised, passivated in white-blue (silver/clear) or yellow

Special versions upon request

Retaining:
with retainers
(mbo catalogue section 13/page 53-57)

12_04
08/2011

Bolts with head and spigot

DIN 1445

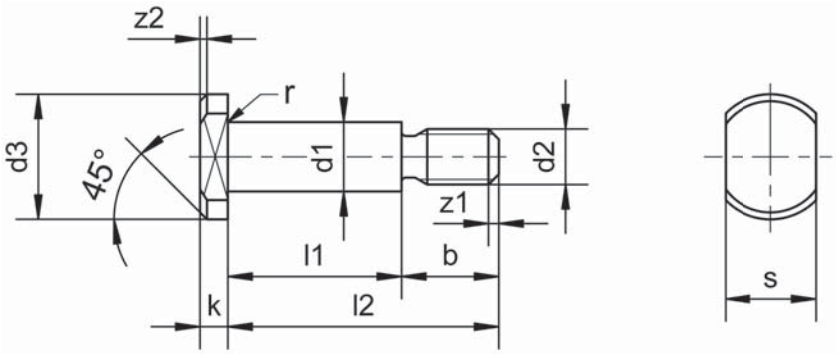

Example for ordering: Bolt of diameter d1 = 12 mm, tolerance range h11, grip l1 = 30 mm and length l2 = 50 mm, of 11SMnPb30+C, electroplated galvanised white;
Bolt DIN 1445 - 12 h11 x 30 x 50 - St galvanised white
Order number: 45 12 0030 0050/013

Ø d1 h11	8	10	12	14	16	18	20	22	24	27	30
b min.	11	14	17	20	20	20	25	25	29	29	36
Ø d2	M 6	M 8	M 10	M 12	M 12	M 12	M 16	M 16	M 20	M 20	M 24
Ø d3 h14	14	18	20	22	25	28	30	33	36	40	44
k js14	3	4	4	4	4.5	5	5	5.5	6	6	8
r	0.6	0.6	0.6	0.6	0.6	1	1	1	1	1	1
s	11	13	17	19	22	24	27	30	32	36	36
z2 ≈	1	1	1.6	1.6	1.6	1.6	2	2	2	2	2
l2 js15	weight (7.85 kg/dm³) kg/1000 pcs. ≈										
16											
(18)											
20											
(22)											
25											
(28)											
30											
35											
40											
45											
50											
55											
60											
65											
70											
75											
80											
85											
90											
(95)											
100											

Material:
1.0718 (11SMnPb30+C)
alternative: stainless steel 1.4305 (X8CrNiS18-9)
(supplement to order number .../000)
stainless steel 1.4404 (X2CrNiMo17-12-2)
(supplement to order number .../4404)

Special versions upon request

Surface protection:

Identifier	Supplement to order number
bright	.../003
phosphatised oiled	.../002
electr. galvanised white (layer min. 5 µm)	.../013
electr. galvanised yellow (layer min. 5 µm)	.../023

12_05
12/2012

mbo Osswald GmbH & Co KG
Metal processing · Linking technology

www.mbo-osswald.com · info@mbo-osswald.de
Tel: + 49 (0) 9345-670-0 · Fax: + 49 (0) 9345-6255

General tolerances
DIN ISO 2768-medium

Subject to technical alterations

We accept no responsibility for incorrect or incomplete details or information given